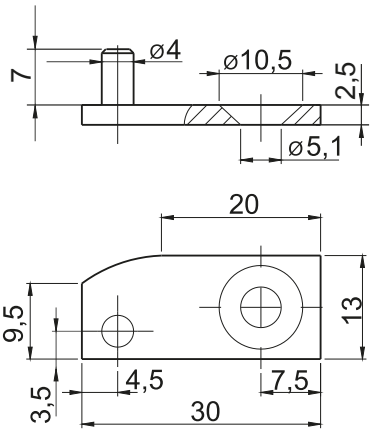

CATALOGUE NO.	COMPONENTS	MATERIAL
3.ST67.001	Holder	Steel zinc plated

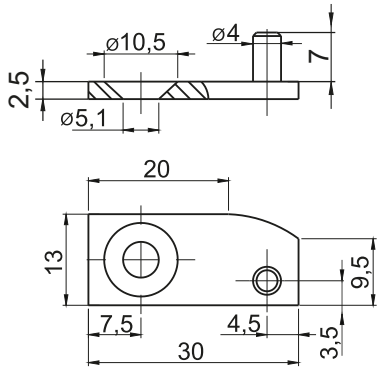

CATALOGUE NO.	COMPONENTS	MATERIAL
3.ST67.002	Holder	Steel zinc plated

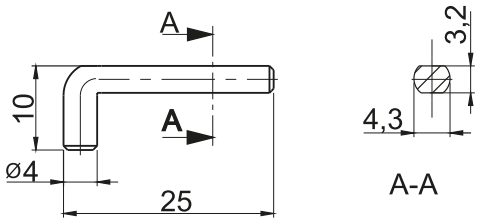

CATALOGUE NO.	COMPONENTS	MATERIAL
3.ST67.001.03	Pin	Steel