Hinge 3.ST56

RST Roztocze
LOCKING SOLUTIONS

stainless steel

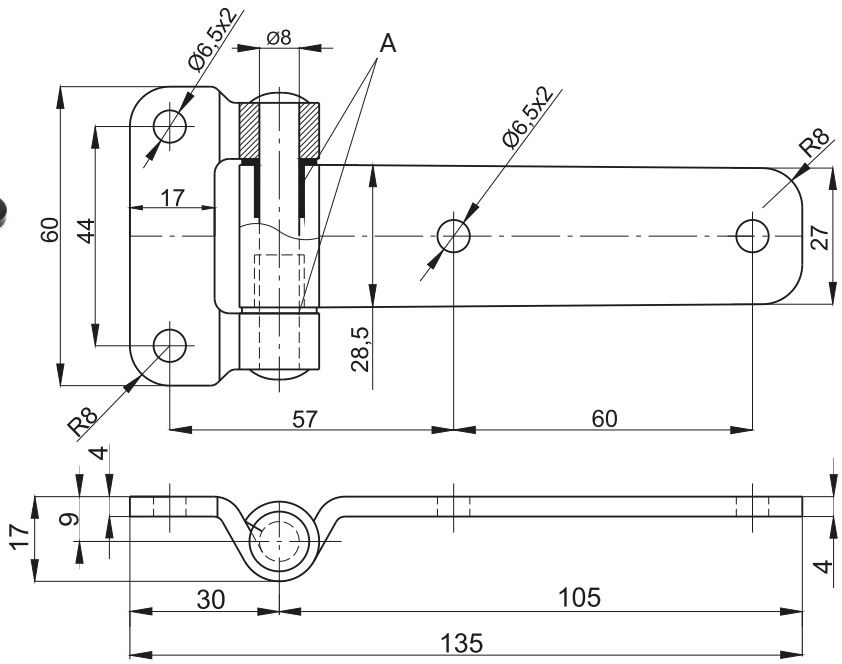

A - plastic washers

CATALOGUE NO.	COMPONENTS	MATERIAL	FINISH [C]
			RAL 9005
3.ST56.002	Holder, Base	Steel zinc plated	04
	Pin	Stainless steel	
3.ST56.002SN	Holder, Base, Pin	Stainless steel	-

stainless steel

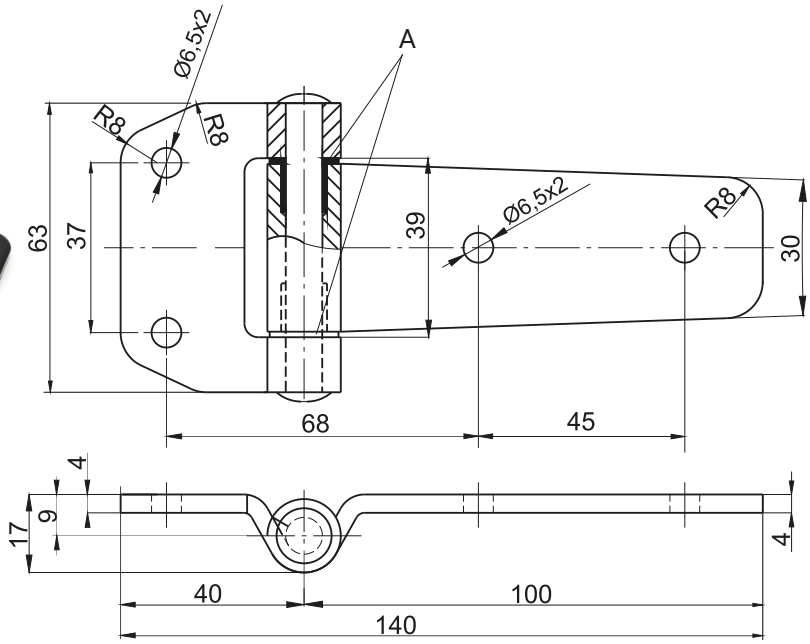

A - plastic washers

CATALOGUE NO.	COMPONENTS	MATERIAL	FINISH [C]
			RAL 9005
3.ST56.100	Holder, Base	Steel zinc plated	04
	Pin	Stainless steel	
3.ST56.100SN	Holder, Base, Pin	Stainless steel	-